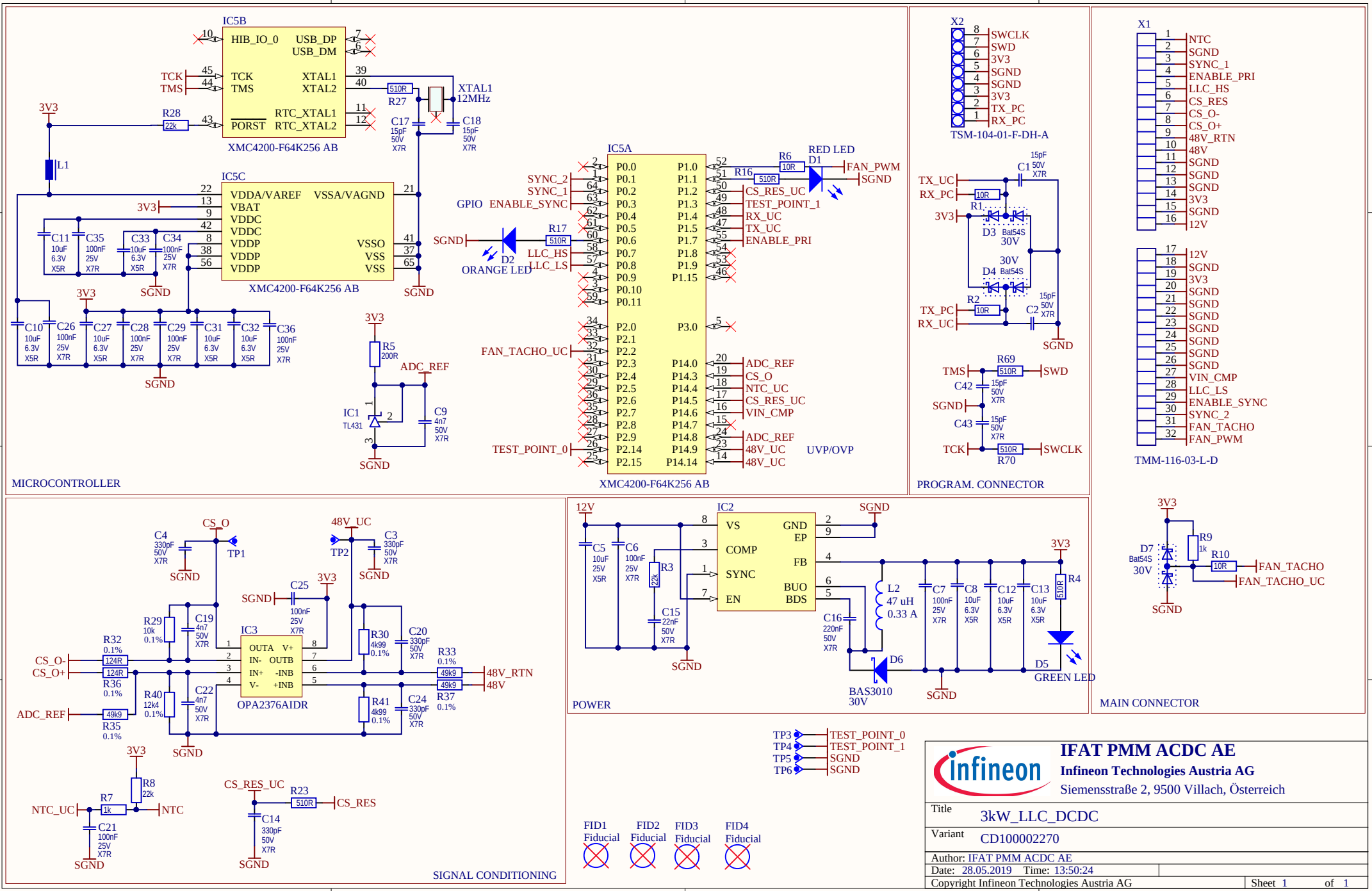

Title	3kW_LLC_DCDC
Variant	CD100002270
Author	IFAT PMM ACDC AE
Date	28.05.2019 Time: 13:50:24
Copyright	Infineon Technologies Austria AG
Sheet	1 of 1

IFAT PMM ACDC AE
Infineon Technologies Austria AG
Siemensstraße 2, 9500 Villach, Österreich